1750 METERS: WESTERN UPDATE #46

THE WESTERN NEWSLETTER FOR THE EXPERIMENTER'S BAND (160 TO 190 KHZ)

July 6, 1987

Available for business-size 22 cent SASE's from: Jim Ericson
226 Charles St., Sunnyvale, CA 94086

(Donation for copy cost appreciated)

ACTIVE WESTERN LOWFER BEACONS (LIST COMPILED 6 July, 1987)

freq(KHz)	IDENT	QTH	SKED INFO
160.025	MAX	Wheatland, WY	24h/7d CW, BPSK/ASCII by request
163.93	MSG	Paso Robles, CA	intermittent
169.863	1SUN	Durant, OK	24h/7d when weather permits
✓174,39	SUK	ElDorado Hills, CA	24h/7d
174.85	7FS	Montesano, WA	unknown
175.703	FAW	Orem, UT	24h/7d
176.0	HDO	Morro Bay, CA	24h/7d BPSK/ASCII
176.26	CO	Glenwood Springs, CO	24h/7d
176.3	BA	Lancaster, IL	off until August
177.26	NVA	Pahrump, NV	24h/7d off for the summer
✓177.48	UCP	Saratoga, CA	daily, approx. 1400 to 1700 GMT
177.750	CT	Flagstaff, AZ	24h/7d soon BPSK/ASCII
179.0	MPM	Salt Lake City, UT	24h/7d 5min BPSK, 5 min CW (alternating)
181.17	IZJ	San Gabriel, CA	off until late July
✓181.71	TLX	Hamilton AFB, CA	24h/7d
182.37	G	Palo Alto, CA	off for summer antenna work
182.62	FPV	Granada Hills, CA	unknown
✓182.9	Z2	9 mi. NW San Simeon, CA	24h/7d
✓183.16	PRK	Saratoga, CA	24h/7d
183.63	PLI	Toluca Lake, CA	24h/7d
184.016	EK	Sunnyvale, CA	24h/7d
✓184.50	JKS	San Anselmo, CA	24h/7d BPSK/ASCII
184.588	Q	Erie, CO	24h/7d
✓184.795	MEL	San Jose, CA	24h/7d
185.0	ZYK	Redway, CA	24h/7d
185.49	AZ	Tucson, AZ	off until Sept. 1
✓187.263	SKY	9 mi. NW San Simeon, CA	wknd days. present id same as Z2
187.3	UPN	Cincinatti, OH	off for the summer
187.49	J	Los Angeles, CA	24h/7d
187.594	SM	San Jose, CA	24h/7d
188.47	9HDQ	Daleville, IN	off for the summer
189.720	8LXJ	Morrow, OH	off for the summer
189.8a	NTS	Mercury, NV	unknown

zero MORE SASES ON FILE

(Check means sig logged at EK QTH in June. Double check is QSO with EK. "a" means approximate frequency. Non-western listings are beacons currently being copied in the west, or they have SASE's on file).

EK NOTES: I thought activity would taper off during the summer months, but my file of correspondence is just as thick as usual! As you'll note, a lot of beacons are off for the summer, but it seems many people are using the time to work on new antennas, filters, etc.

The **Z2 beacon** (120 miles away) continues to grind away and is very often QRK 3 copy here around midday. Last week I copied (barely) the weak **SKY** signal (see Z2 NEWS). More to report on this in the next issue as Mike plans a series of experiments at the SKY site.

John Seamons (JKS) is running 24 hour BPSK and is evaluating the MAX receiver. Six people are known to be actively working (designing, evaluating) BPSK. There is a lot of technical correspondence between these people, and most of it too in-depth for use in the Western Update at this point. Somewhere down the line we'll try to summarize what is going on.

To those who sent donations in June...thanks! Remember, it costs at least $6 a year per person to cover copy costs and incidental WU expenses.

Z2 NEWS : by Mike Mideke, Box 123, San Simeon, CA 93452. It is the time of year when I must spend most of my days cutting, hauling and splitting oak wood so that the shack will be warm when those long winter DX nights arrive. LF efforts have been relegated to the background, but I have gotten some writing done and nearly finished a new installation at the SKY site.

I had nothing but a long series of negative results from last winter's horizontal antenna experiments (see WU#40, p.4) but I fell in love with the ease of working at the site. It is only 1/4 mile from the shack and less than 500 feet higher -- so it's only a 45 minute WALK as opposed to at least 45 minutes of hard going to get up to Z2.

Even better, I can drive to SKY, which means I can bring in big batteries, a generator for soldering, all the necessary tools and supplies in one trip...and this is sheer joy compared to crawling up the rockslide to Z2 with 60 pounds of batteries on my back and a pair of steel fenceposts for walking sticks!

Having decided that SKY is a good place to do more experiments, I got the brush bulldozed out of the 2 acre deer-fenced enclosure, put a pole atop a broken digger pine (scary job!) and stuck another in the oak that supported the transmitter during earlier experiments. With this support structure in place, I immediately put up a suspended flattop vertical, utilizing one of the 4 wire flattops left over from the horizontal tests.

Under the center of the flattop I assembled a wooden framework about 4 inches high. To the top of this framework I attached poultry wire to create an 8' x 20' screen, adding an additional scrap to bring the area of elevated screen to 175 sq. feet. In the middle of the screened area I put down enough flooring to support a doghouse and batteries, with room left over for workspace. Radials extend from the edge of the mesh to several copper pipe grounds and the 1/4 mile of 6 foot fence that surrounds the site.

At this point I fired up a transmitter and found that I had better antenna efficiency than at Z2. Next I put in additional tophat support structures and added 6 radial tophat elements. The radial tophat proved considerably more effective than the rectangular flattop -- to the extent that removing 3 of the 4 wires of the original flattop made almost no difference to antenna performance.

Onsite measurements indicate that the SKY installation is considerably better than Z2. However, the groundwave from SKY is down at least 6 dB from Z2. This is mainly due to terrain and vegetation absorbtion. The situation to the west is especially bad -- at 150 feet from the flattop I am looking DOWN at it, and the horizon is about 1/4 wavelength higher! Nevertheless, the groundwave has been copied about 220 miles south at **IZJ**, and everyone within the local 40 mile radius seems to hear the signal fairly easily. So it looks like I have something that gets out well enough for test purposes. In addition, since there is no particular obstruction to high-angle radiation, it seems possible that there may be a skywave component which could become apparent on quiet winter nights.

At the present moment, the SKY frequency is 187.26 KHz and the ident is Z2. In fact, when SKY is on, it is simply an identical, parallel transmission to Z2. Frequency, ident and transmission mode may change without notice. Present schedule is daytime only, and not every day, owing to the lack of sufficient power at the site. I will be sure to have it running on weekends.

FIELD DAY. Another Field Day has rolled around with no sign of a LOWFER station in the field. The occasion of the big amateur contest is probably not really suitable for portable 1750m transmitting endeavors but the concept seems entirely appropriate. Aside from 8LXJ's regular efforts and my one portable session in WN, this sort of activity has been almost entirely neglected. It would be really fun if we could put two stations in the field at the same time, separated by a respectable distance (say 250 miles in summer or 600 to 1000 miles in winter) and try to work each other and everyone in between.

73 - mike

Now available- LF PROPAGATION PACKET #1. This packet is a collection of propagation information focusing on the period from Dec. 10,'86 through Mar. 10, '87. It is intended both to support inquiries into LF events observed during that period and to promote more systematic and extensive studies in the future. Includes: Charts of nightly Mideke observations of NDBs DDP 391, TBG 311, CM 379, TUK 194, QL 248, YJ 233. Also KOMO, 1 mHz (Seattle). Charts of Mideke Lowfer observations for 7FS (WN), MAX (WY), 8LXJ (OH) KRY (OH), MPM (UT) and FAW (UT). Dave Stinson's Mercury NV Lowfer listening results and a composite of Brice Anderson's 1750m skip reception are plotted. Blank charts included for reader use. Many pages of text and supporting materials. Approx. 13 P, 8½"x11". Send $2.00 to Michael Mideke, Box 123, San Simeon, CA 93452 to cover copy and mailing costs.

HDO AUDIO FILTER
by: Cliff Buttschardt

Enclosed is a copy of the final schematic of the audio filter design used to optimize bandwidth with nearly no ringing for receive applictions. I have never seen so much performance out of two fifty cent chips in my life! The design is out of a new textbook by Arthur Williams "Electronic Filter Design". It is a McGraw Hill fifty dollar book. The formal name of the filter is,"three section transitional gaussian 6 db multiple feedback design". This was worked out for radar use in which any ringing would cause smearing of the presented signal and therefore, just right for aural use too. Comments would be most appreciated, especially compared to the MF 10 and MFJ filters.

Here are some of the important characteristics: center frequency is 500 Hz and can be altered by keeping the capacitor at 0.1 ufd and changing the resistance by the frequency ratio. The gain is 12 db and the circuit Q is fifteen resulting in a bandwidth of 33 Hz at 3 db down. One cannot state "poles" in this filter as in reality, only one pole and two imaginary "poles" occur in each op amp section. The result is as if three poles exist in each section. 30 db down the bandwidth is 153 hz. The attack time is 18 millseconds and the fall time is 22 ms at the ten and 90 % points. There is absolutely no overshoot or undershoot to be seen on the scope. The only difficulty is that the resistor values must be selected. One percent values are fine. The one hundered ohm shunt at each input is a ten turn pot adjusted to the frequency indicated, ie: 480, 520.8 and 500 Hz respectively. Two MC1458 chips were used but any style 741 op amps can be used. There was one amp left over and a headphone amplifier was made with it. When 500 ohm headphones are used, the amplifier limits beutifully and prevents one from going nuts with static crashes. All this for a ten milliamp load at 12 volts. Operation continues down to 6 volts so a nine volt battery is a good choice for most applications. Three sections seem about right. Six sections appear far too sharp for my ears, but might be right for some. In the latter case, the extra op amp can be an notch filter. de Cliff-HDO

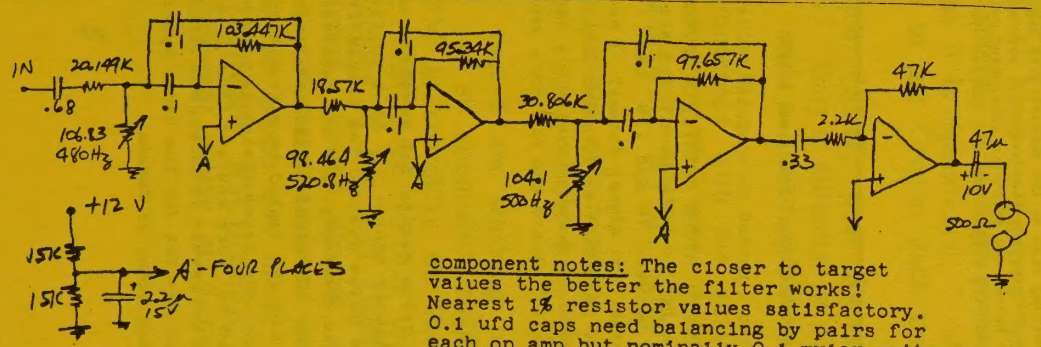

component notes: The closer to target values the better the filter works! Nearest 1% resistor values satisfactory. 0.1 ufd caps need balancing by pairs for each op amp but nominally 0.1 mylar units.

3 Section transistional gaussian 6db filter (minimum ringing) W6HDO

FIGHTING YOUR NOISE FLOOR

Michael Mideke

Summer conditions limit our nighttime DX efforts but, in many areas of the west, daytime static is only an occasional problem. This is especially true during the morning hours. Listening from a quiet site reveals that daytime Lowfer groundwaves are doing just fine- easily covering 100 to 250 and more miles. Since most listeners are not in quiet areas, not much of this groundwave DX gets heard. 200 mile daytime groundwave signals may be stronger than some good single and multi-hop signals on winter nights. Clearly these signals won't be heard either, unless something is done to improve odds in favor of the listener.

TYPICAL URBAN, SUBURBAN AND SEMI-RURAL NOISE FLOORS RANGE ANYWHERE FROM 20dB TO MORE THAN 40dB ABOVE EXPECTED WEAK-SIGNAL LEVELS. It is not realistic to expect distant transmitting stations to overcome such noise floors!

In all cases these noise problems can be alleviated at the receiver. Whether or not noise reduction can be accomplished to a useful degree depends on the situation and cannot be predicted in advance- but it is certain that little beyond local signals will penetrate the noise floor unless the listener takes steps to reduce it.

Working on noise takes time and effort but the results can be just as rewarding as catching a rare signal. (And the first achievement is usually a prerequisite for the second!) Summer is a good time to plug away at noise problems. True enough, it is almost certain that by winter the noise will be worse and its characteristics will have changed- but with proven noise fighting tools already at hand, simple adjustments may solve big problems. The time to start working on the problem is not at 3AM on a December morning when somebody on the other side of the country has called to say you have a great signal so how about a QSO---

SEVEN APPROACHES TO NOISE REDUCTION

1. ELIMINATE- Wherever possible, eliminate the source.
2. REDUCE BANDWIDTH- The consequences of broadband noise are reduced as passband is narrowed. Our signals occupy only a few Hz and signal to noise ratio suffers if the receiving window is hundreds or thousands of Hz wide. Also, a lot of noise actually consists of relatively clean and stable harmonics of 60 and 120 Hz, creating signals at these intervals. Narrowband reception may reveal the spaces in between to be surprisingly quiet.
3. NULL- Use loops and/or RF phasing units to null out local noise sources. Sharp, steerable nulls of 20 to 40 dB or better are not all that hard to achieve. They can make a huge difference in the noise picture.
4. ISOLATE- Inverse square law applies to noise as to other signals. Antenna location is important! Watch out for noise coupled in via transmission lines, power lines, grounds and other antennas, (especially LF XMTNG verticals).
5. BLANK- Most modern receivers incorperate effective asynchronous blankers which may make a big dent in some types of noise. Synchronous blankers can be added or created as modifications of an existing blanker (access the blanking gate), useful for elimination of 2 or more layers of SCR crud. Use a scope.
6. COMBINE- Only rarely will a single approach solve the problems that exist. A combination of techniques will permit the reduction or elimination of several noises while providing flexibility for dealing with the ever-changing noise environment.
7. SHARE- Share both your problems and your successes here in WU. Make tape of especially good solutions- half the battle is convincing others that solutions exist!

The following article was received from Herb Vanderbeek (G)

A GWEN TRNSMITTER SITE
or
AN INTRUDER OF OUR LOWFER BAND

Recently while on a motorhome rally about 200 miles from my QTH I heard from a local HAM that a GWEN site was located about five miles out of town. The next day I drove about in circles (my normal mode) in the indicated area and finally located the station.

It was not clearly visible from the primary road. Not at all from the secondary due to the trees in the vicinity. Upon approach, unless one knew what to expect an LF station to look like, one would say it was a local B.C. station. In fact my decision to inspect the tower is that as a local B.C. station it was out of place. Not until I was within several hundred yards did its real identity, the wire top hat, become visible.

Up close: These stations are quite probably the typical military style installations. Therefore possibly all are very alike. Upon driving near the installation only the tower is visible. I walked 1/2 mile through trees to an open field and then to the immediate vicinity. Here were located several chain link fence enclosures. Studying the layout I would judge the following situation.

The tower is about 300 feet high and it appears to be made of 15, 20 foot triangular tower sections. It is mounted upon a concrete pylon with typical high voltage/power base support insulator. The insulator, lead wire sizes, spacing of lighting transformers, etc suggest a power level comparable to a 25-50 KW AM BC station. Guying is at every 60 feet. The lower guys terminate within a fenced off area about 150 feet on a side. The upper guys, top set wired as the top hat, are terminated about 200 feet out and each is enclosed by a 7 foot fence. There are 12 top hat radials, about 100 feet long. All guys seem to be broken about every 100 feet with insulators about 18" long. The top radials end in a corona ring with concentric insulators about 36" long. Close in to the antenna base is the antenna dog-house both in an enclosure of chain-link fencing 7 feet high and about 30 feet on a side. A gravel service road led up through a locked gate in the stock fence to the tower fence gate. About 300 feet down the hillock upon which the tower was located was a second enlosure about 30 feet on a side. Inside this were two transportable dog-houses. One showing a muffler and thus the diesel electric backup power generator. The other, "the brains", with several side mounted down facing vent "stacks", about 12" by 18" each with its own slide out dust/vermin filters. Mounted several feet above and on a corner of "the brains" was an orthogonal double loop. About 50 feet away and inside a smaller 7 foot high enclosure was a free standing tower with a small vertically polarized double log periodic antenna near the top. The antenna points to an area of known military concentration. A local power line has been tapped to supply the station while in its stand-by/test mode! There is no identification any-where. As installed the station appears quite innocuous. An almost adequate warning sign at the service gate suggests that one stay away from the antenna and presumes that everyone understands the word radiation. The three dog houses are painted a sand/wheat color which matches very well with the surrounding earthcolors and "yellow rye".

The orthogonal double loop of 2 inch tubing is about 3 feet on a side with very rounded corners. The UHF double log periodic array appears to be very wide band with a size that I'd estimate should cover from the middle UHF and well into the lower microwave region and as such could well be used in spread spectrum mode for local drop and insert of data and site telemetry.

CONJECTURE: It is likely that "the brains" dog house contains the microwave equipment, digital processing circuitry, and digitally modulated exciter while the antenna dog house contains the amplifier and antenna matching/loading coil circuits. The double loop probably protects the sensitive receiver input circuits during the transmit mode but could also be used to look through its own transmission for data coming in from other nodes. I have not been able to guess the nature of the L.F. signal except that it emits a clean and powerful, one half second energy burst at specific frequencies between 150 and 175 kilohertz. With the money available and technology at hand these transmitters do not need to be fixed frequency and could be frequency agile and shifted to any frequency within their band. "Their band" being like the sitting place of an elephant. Just any place that suits it. More probably for increased reliability the frequency is fixed with the receivers at each node switching about to sample data from other nodes. Even higher reliability would suggest multiple receivers each on a different input frequency.

As LOWFERS the gauntlet has been thrown onto our door step. Either improve our receivers or get out of this, the "dumbest of all hobbies."

Herb

(And, here's an interesting input from Frank Reid)

Information request that I posted on computer bulletin-board:

How does the DECCA navigation system work? I understand that it's a British system similar to LORAN-A. There are several "chains" of transmitters between 70 and 130 kHz. What is DECCA's range, coverage area, and signal format? I have seen no DECCA equipment advertized in marine electronics catalogs in the U.S. Is DECCA considered a modern system? Ian Fleming mentions it in "Thunderball," aboard the bad guy's yacht.
--

Abridged unsigned reply:

I worked as a technician Decca Marine for several years... You are right about the frequency range. It is a continous-wave system whereas LORAN is a pulse system. The transmitters (3 or more) transmit on a specific frequency, and the receiver measures the phase difference between the signals. Each transmitter is on a different frequency but all are locked to a frequency standard such as a cesium-beam clock. The Decca system is very popular in Europe, and is (claimed to be) more acurate than LORAN. Decca makes money by leasing the recievers to ships, and since LORAN is free, there is no market in the USA for the Decca system... There is a Decca chain on the east coast of Canada.

The system is not pure cw; some type of info is encoded... The techs from the UK told us about a European fellow who decided to get rich-- he designed a digital reciever that used the Decca system. The Decca recievers used big dials like analog clocks, kinda looked like the altimeters in old crashing airplane movies, the hands would spin wildly until it locked onto the signal. Anyway, this fellow's receiver worked well and sold for the price of a 6-month Decca lease. After many canceled leases, the boys at Decca found out what was going on and they got one of his receivers, analyzed it and found that by slightly changing the signal, the bogus receiver doesn't track anymore. But it didn't effect the mechanical works in a "real" Decca receiver.

73,
Frank Reid
N9MKU

MAILBAG: A card from **Keith Olson (7FS)** in Belfair, WA indicates he may have his beacon back on soon. His LOWFER activity was curtailed for awhile since his mobile home sustained $15,000 damage while being moved. Keith has previewed a copy of the second edition of **The Beverage Antenna Handbook** by Misek, and says it is very good. "The chapters on radiation angles and short beverages are informative. It is confirmation of the work done by Fessender in 1906 - 1912, which indicated that the vertical antenna with a low angle of radiation is no good for DX on LF."

Hal Murken (the Eastcoast LOWFER newsletter editor) writes, "Things are dead slow. Except for local experiments, there are very few beacons in operation back here. "

Chris Spencer (FAW) in Utah says, "FAW is holding up well. I wound a new coil using #12 wire. It works, but I think capacitance is reducing my efficiency due to low placement of the variometer coil. I want to get started in BPSK as well. Perhaps I will make that a late summer project."

Brice Anderson (BA) writes from Illinois that everybody back there is off for the summer except HRM, TH and WI. Recent storms wreaked havoc on Brice's longwire, and his amateur antennas. However, his 40 foot guyed 2"x2" wooden LF vertical mast stood the storms in great shape. He comments that, "**Carl Lundgren (TH)** called me after he returned from the Westcoast LOWFER convention. He is enthusiastic about the great interest shown in trying to nail down those elusive parameters that seem to determine LF skip. He wants to start coast-to-coast schedules on 40 meters to let us all take advantage of any unusual propagation conditions on ANY frequency, to try to tie them into an understanding of LF skip."

James Coote (J) writes from Los Angeles, "My beacon at present is 24h/7d. **IZJ** barely copies J due to my present crummy antenna, a 45 foot wire which terminates in ground at the far end."

My apologies to **Greg Farkas (AZ)**. I have been mis-spelling his name for months here in the WU. It's spelled with a "K" not "C"! Greg says, "Out of respect for our sudden and violent southwest thunderstorms, AZ will be off the air until September 1.

Arliss Thompson writes from Oregon and says, "I hope to have a beacon going before #46 hits the streets. It will be CW only, initially. The antenna is a cage assembly about 50 feet high, supported by my tower. I'll supply details as soon as it is operational. " Arliss also plans to contact **Vern Sahnow (AVV)** and come up with a plan to get Oregon back on the map, Lowfer-wise!

In a telephone conversation with **Gary Waldsmith (SUK)** near Sacramento, I reported that SUK is putting a booming signal all over California. Gary's antenna is different than most. It's a toploaded vertical with many long tophat wires, and a tuned groundplane at the base. Whatever you're doing Gary, is definitely working!

Al Taylor of Whitehorn, CA says, "I am very impressed with the quality of writing and technical info in WU. I plan to start putting a LF beacon together when I return from Scotland and England at the end of July. My 'Elmer' Sam Rappold (ZYK) in Redway has his beacon running again. "

Bob Horton (MSG) has been on and off the air (mostly off) recently. Seems that storms are taking out his VN67AF finals faster than he can buy them. Bob, how about trying a 6L6? (just kidding).

Bob Cutter (CO) wrote, "I must warn you all that I am working on a killer antenna design for this fall and it is quite likely you will have to use an attenuator for CO come winter!"

Mark Mallory (MPM) writes from Utah, "MPM is currently on the air from Quanta Corporation where I work, using a 35 foot vertical wire with three 15-foot tophat radials. The ground system is a set of 8 radials which run from the center of the roof (feedpoint) out to each corner of the building. Total series resistance of antenna, ground system, and helix is 24.5 ohms, almost all of which is in the helix. The helix is a variometer enclosed in a garbage bag to protect it from the weather. The transmitter is housed in an ammo can along with a car battery which is kept charged by a solar panel. Modulation is currently ASCII/BPSK (10 baud) for the first 5 minutes of each hour, alternating with 5 baud coherent morse at 5 minute intervals. I

plan on finalizing the design for my BPSK converter (for my TS-430) soon." Mark also notes that he QSY'd to 179.000 kHz, a change of 20 Hertz.

Herb Vanderbeek (G) sent along a copy of a letter he sent to LOWFERS in IL, OH, WY, IN, UT, SD, CO and OK. Seems Herb will soon drive from Washington, D.C. back to California, and he plans to visit a number of LOWFERS along the way. Herb will be armed with a camera, so get those shacks cleaned up!

Daryl Isbell of OK notes, "Long ago I had hoped to write you and announce a new beacon. It's not for want of trying; I've spent long hours on the project. The problem is, in a single word, sand. My location here is on several feet of sand and I have not been able to get a decent ground. I cannot afford the outlay of a large number of radials, and in any case am prohibited from digging up the yard to lay them. If someone out there has a solution to this problem I'd appreciate help."

Jerry Parker (OWR) checked in to say that he still plans to get OWR back on before long. He plans to put up the old NX antenna, complete with the large OWR loading coil.

An airwound coil of 2.5 mH resonates a 10-meter whip antenna for a trial in the experimental 1750-meter band. One watt of input to a transistor final amplifier produced enough signal for a 10-mile mobile-to-fixed-station signal. *(W6HDO photo)*

Cliff Buttschardt (HDO) sent along this photo which was published in a 1983 QST Magazine. This grand experiment must have caused some stares. As Mitchell Lee (MEL) says, "Cliff is a guy who knows everybody, and has done everything!" In his letter Cliff says, "Regarding sequenced beacons, I feel that we really need such a thing and that it should be promoted. What we need to decide is what frequency at the high end of the band is free of PLC's" Cliff suggests that maybe **Dave Stinson (NTS) and Mike Mideke (Z2)** put their heads together and come up with a good frequency. Herb Vanderbeek and I are willing to try sequenced operation this winter if there is interest.

Randy Seden of Simi Valley, CA wrote describing the 120 Hz syncronous noise blanker which was demonstrated to him recently by **Ed Phillips (IZJ)**. The Utah contingent (FAW type) also have developed a noise blanker for local dimmer noise, but the design has not been optimized. I say, the heck with a fully optimized design. Let's get a simple circuit down on paper and published on WU so that we can have a little quieter winter! Yes, I AM begging!

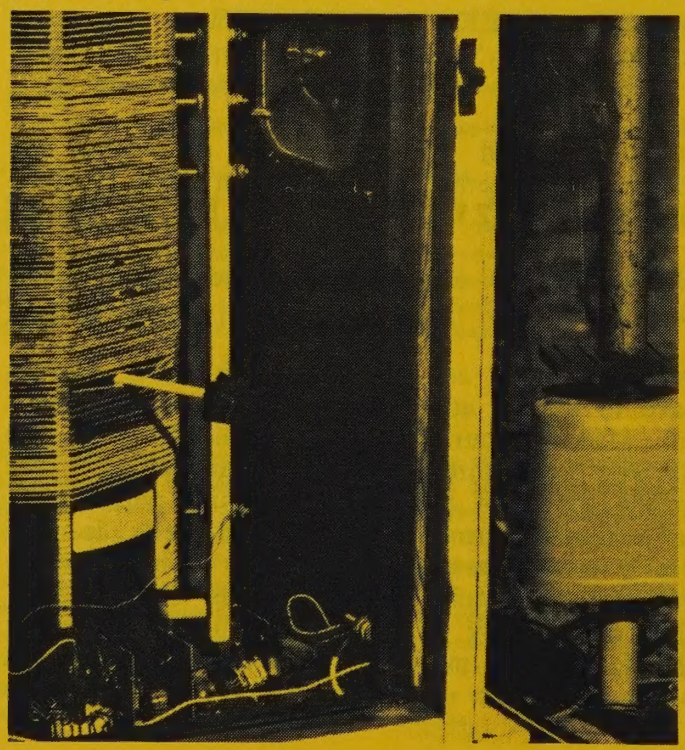

I was copied on a number of letters from **Max Carter, Clint Turner**, and others, on the subject of BPSK. Max and Clint are deeply involved on the design side. A number of other LOWFERS are watching and waiting for evaluation results, and hopefully a hardware design that is manageable. As I mentioned, the MAX receiver (the ONLY BPSK receiver at the moment) is still under evaluation by California LOWFERS. I can only continue to suggest that those involved in BPSK correspondence copy me, and all other active BPSK folks on their letters. This seems to be working out, and I think it should continue.

The last item in the mailbag is a photo (left) of the Z2 loading coil/variometer sent by Mike Mideke.The coil sits inside a wooden doghouse. The base of the transmit vertical is visible on the right side of the photo. You can see the variometer knob sticking out of the windings toward the bottom of the coil.

WESTERN UPDATE 'ACTIVE LIST' as of 6 July, 1987

2	Anderson	Brice	BA	W9PNE	P.O. Box 14	Lancaster	IL	62855		(618)299-2441
4	Babcock	David		WA6EBH	2940 Cheyenne Rd.	Riverside	CA	92506		(714)682-1910
5	Bahr	Leland	LEE	W0VT	914 Golden Bear Ln.	Kingwood	TX	77339-2914		(713)359-5284
6	Bain	Sam		W6EGZ	4106 Nevis St.	Pleasanton	CA	94506		
7	Balfour	Herbert	OHH	VE3OHH	91 Elgin Mills Rd. W.	Richmond Hill	Ont.	L4C4M1	Canada	(416)884-5355
8	Barlow	Ron		N4GJV	Rt. 1 Box 297	Cleveland	NC	27013		
9	Barry	Fred		N6RTU	105 Solana Dr.	Los Altos	CA	94022		(415)948-8068
10	Bauer	Frank		W6FPO	P.O.Box 1086	Felton	CA	95018		(416)884-5355
11	Billeci	Dave		WA6UHA	211 Molimo Dr.	San Francisco	CA	94127		
12	Bittner	Mike			27215 Sunnyridge Rd.	Palos Verdes	CA	90274		
14	Borglum	James			5549 Lesa Rd.	La Mesa	CA	92041		(619)464-3250
15	Bradley	Dave		W6CUB	POB 23922	San Jose	CA	95153		
16	Brady	Aaron			41458 N. 50th St. W	Quartz Hill	CA	93536		(805)943-1580
18	Brault	Charles			45 Hickory Ln.	Portsmouth	NH	03801		(603)436-8637
19	Burhans	Ralph			161 Grosvenor St.	Athens	OH	45701		
20	Buttschardt	Cliff	HDO	W6HDO	950 Pacific St.	Morro Bay	CA	93442		(805)772-2132
21	Carter	Max	MAX		46 - 14th St.	Wheatland	WY	82201		(307)322-9439
23	Collins	Bob		W6WBY	P.O.Box 93	Pahrump	NV	89041		
24	Coote	James	J	WB6AAM	808 N. Ave 66	Los Angeles	CA	90042		
28	Curry	David	PLI	WD4PLI	4415 Cahuenga Bl.	Toluca Lake	CA	91602		(818)760-0213
29	Cutter	Robert	CO	KIOG	701 19th St.	Glenwood Springs	CO	81601		
30	Defrancesco	Sal	SD	K1RGO	17 Jeffry Rd.	East Haven	CT	06512		(203)467-3590
31	Diebold	John		W7SCU	2423 8th Ave. No. #301	Seattle	WA	98109		(206)283-1035
32	Diggins	William	8LXJ	WA8LXJ	2699 Shamrock Dr.	Morrow	OH	45768		(513)899-2876
33	DuVall	Tom		W6QJZ	1024 Devonshire	San Diego	CA	92107		(619)223-1576
34	Eatough	Charles		W6UTN	610 Palacia Ct.	Turlock	CA	95380		
35	Elmore	Clair			8300 Appian Way	Sebastopol	CA	95472		
36	Ericson	Jim	EK	KG6EK	226 Charles St.	Sunnyvale	CA	94086		(408)773-8947
37	Farkas	Greg	AZ	AK7Y	PO 17074	Tucson	AZ	85731		(602)749-4796
38	Faulkner	Charles	FPV	W6FPV	15844 McKeever	Granada Hills	CA	91344		(818)366-6210
39	Flynn	Bill			6032 Birch Place	Newark	CA	94560-4144		
41	Harbison	Norman	NH	K2NH	Rd.1 Box 416	Monroeville	NJ	08343		(609)881-2749
42	Hilferty	Dick	RB	W5TOS	RFD 1 Box 229J	Roswell	NM	88201		(505)623-4895
45	Horton	Bob	MSG	W6MSG	2 Fresno St.	Paso Robles	CA	93446		(805)238-2250
47	Humphrey	Lee			Rt. 2 Box 626	Jasper	TX	75951		
48	Isbell	Daryl			Box 860	Atoka	OK	74525		
49	Johnson	Dave			PO Box 906	Los Banos	CA	93635		
51	Johnston	David	9HDQ	K9HDQ	RR1 Box 108C	Daleville	IN	47334		(317)354-2884
52	Jones	Ron		K7RJ	43 Cherryview Dr.	West Valley City	UT	84120		(801)966-6879
53	Keller	Eb			2984 Fallwood Ln.	San Jose	CA	95132		(408)263-6229
54	Kincaid	Nilan			5529 W. 140th St.	Hawthorne	CA	90250		(213)643-5269
56	Kleinkramer	Paul	MUK	N6MUK	625 W. Ormonde Rd.	San Luis Obispo	CA	93401		(805)543-3075
57	Kopari	Les		WY6H	2515 Gitana Ct.	Morgan Hill	CA	95037		
58	Kraus	Howard			372 Callodine Ave.	Amherst	NY	14226		
59	Lacy	Milo		W7GUF	PO 624	Talent	OR	97540		
60	Lamboy	Ben		KP4CA	Guatemala 810	San Juan P.Rico		00921		
63	Larson	Rolf			PO Box 60762	Sunnyvale	CA	94088		
64	Layer	Hal			1600 Holloway Av.	San Francisco	CA	94132		
66	Lee	Mitchell	MEL	KB6FPW	172 N. 24th St.	San Jose	CA	95116		(408)298-3026
69	Lundgren	Carl	TH	W2AZQ	60 Woodhollow Rd.	Colts Neck	NJ	07722		(201)842-4780
70	Mallory	Mark	MPM	WB7CAK	5196 Cobblecreek Rd.#7K	Salt Lake City	UT	84117		
71	Manley	Dean		KH6B	2058 Ainaola Dr.	Hilo	HI	96720-3638		(808)959-8257
73	Martin	Lt. Steve		WA3SAD	990 Easy St.	Morgan Hill	CA	95037		(408)683-0679
75	McGreevy	Steve	TLX	N6NKS	45 Elda Dr.	San Rafael	CA	94903		(415)479-4259
77	Mideke	Michael	Z2	WB6EER	Box 123	San Simeon	CA	93452		
79	Morgan	Robert		KA0FTA	2817 W. St. Anne	Rapid City	SD	57702		
81	Munger Jr.	Eugene		KE4FO	3331 Bankhead Ave.	Montgomery	AL	36106-2449		(205)263-3430
82	Murken	Hal	HRM	NQ2Y	19 Hobby Lane	Oakland	NJ	07436		(201)337-3984
85	Olson	Keith	7FS	W7FS	E.15470 Hwy.106	Belfair	WA	98528		(206)249-5549
86	Osterud	Jim		AG7A	519 Capri Circle	Tooele	Utah	84074		

ACTIVE LIST, continued

87	Owens	Chip	Q	NW0O	1363 Tipperary	Boulder	CO	80303	
88	Parker	Jerry	OWR	WA6OWR	PO Box 2448	Paso Robles	CA	93447	(805)239-3180
89	Parker	Scott		WA7VYJ	Univ.Stn. Box 7455	Provo	UT	84602	
90	Pepe	Bill		WA2TDR	Box 1915	Bloomfield	NJ	07003	
91	Peterson	Art			851 31st. St.	Richmond	CA	94804	(415)234-2014
92	Phillips	Ed	IZJ	W6IZJ	408 N. Alabama St.	San Gabriel	CA	91775	(818)285-8308
93	Phillipson	Bill		W6PRI	18954 Pendergast Av.	Cupertino	CA	95014	
95	Pomplun	Don		K2BIO	521 Van Buren Pl.	San Ramon	CA	94583	
96	Porter	Steve		KB6LRL	41 Catalpha Ave.	Mill Valley	CA	94941	
98	Raney	David	UPN	WB8UPN	4128 Linden Ave.	Cincinnati	OH	45236	(513)791-0740
100	Ratzlaff	Steve		AA7U	954 Henderson /49	Sunnyvale	CA	94086	(408)248-0343
101	Rayburn	Les	XMGR	KA1MGR	665-E Freewill Rd. NW	Cleveland	TN	37311	(615)479-4330
102	Reid	Frank		W9MKV	Box 5283	Bloomington	IN	47402	
103	Remington	Sheldon	HO	NI6E	210 Laehala St.	Hilo	HI	96720	(808)935-8269
104	Roberts	Todd	ABC	WD4NGG	POB 1413	Hilton Head Is.	SC	29925	(803)681-8114
106	Sahnow	Vern	AVV	W7AVV	2315 Greenwood Rd.	Independence	OR	97351	
108	Schworer	Lt. Bill		WC6P	39079 Walnut Terrace	Fremont	CA	94538	
109	Seamons	John	JKS	KF6VO	95 Holstein Rd.	San Anselmo	CA	94960	(415)456-6090
110	Seden	Randy		WD6ELU	1272 Harold Av.	Simi Valley	CA	93065	
111	Sethman	Bob	QYV	WA3QYV	92 Allen Plan	Donora	PA	15033	(412)379-6994
112	Skillin	Boyd			3876 E. Pico	Fresno	CA	93726	
115	Smith	Dan	PRK	K6PRK	13165 McDole St.	Saratoga	CA	95070	(408)378-7470
116	Smith	Glen		N6CX	220 Laurel/PO 475	Kenwood	CA	95452	
117	Snow	John		N6AMZ	3708 Judah St.	San Francisco	CA	94122-1227	
118	Spaulding	Fred			883 San Simeon Dr.	Mountain View	CA	94043	
120	Spencer	Chris	FAW	WB7FAW	722 W 1850 N	Orem	UT	84057	(801)225-7852
122	Statom	Mike			1604 S. Campbell Av.	Alhambra	CA	91803	(818)289-7170
124	Stinson	Dave	NTS	AB5S/7	1400 E. Reno Av. #72	Las Vegas	NV	89119	(702)736-6021
125	Storey	Chris		KA6WNK	2743 Albatross Dr.	Costa Mesa	CA	92626	
126	Sullivan	John			2069 Touraine Ln.	Half Moon Bay	CA	94019	
127	Taylor	Al			112 Cook Rd.	Whitethorn	CA	95489	
128	Thompson	Arliss		W7XU	7314 SW 28th	Portland	OR	97219	(503)293-1258
129	Tierney	David			2315 Williams St.	Bellingham	WA	98225	
131	Turner	Clint	CT	KA7OEI	1825 Calico Way	Flagstaff	AZ	86004	(602)527-0011
132	VanHorn	Dave			3040 Redhill	Costa Mesa	CA	92626	(714)979-1870
133	Vanderbeek	Herb	G	WY6G	630 Ashton Ave.	Palo Alto	CA	94306	(415)493-1726
134	Vandermaaten	Jim	SM	WB6QZL	1276 Tourney Drive	San Jose	CA	95131	(408)258-6872
135	Waggoner	Larry			1712 Valleyview Ct.	Wichita	KS	67212-1245	(316)722-3726
136	Waldsmith	Gary	SUK	K4SUK	3550 Ridgeview Dr.	Eldorado Hills	CA	95630	(916)933-3815
138	Weiss	Jim			c/o WTAQ	LaGrange	ILL	60525	(312)579-9104
141	Wright	Rick	1SUN	KA5YWH	Box4181 Stn.A SEOSU	Durant	OK	74701	
142	Zizelman	John		KA5RPU	1301 S. Alexander Dr.	Baytown	TX	77520	

FINAL NOTES: I hope all of you have a fun, productive summer! We still need your articles, circuits, photos, etc. in order to keep the WU interesting. Write and tell what you're doing/planning.

Some more resource info overlooked in the last issue. **Digi-Key Corporation** is a great source of IC's, connectors, caps, etc. Write for a free catalog. PO Box 677, Thief River Falls, MN 56701. Tel. 1-800-344-4539. **The Speleonics Quarterly** is a newsletter for cavers who use low-frequencies in their communication. Almost as crazy a hobby as we LOWFERS enjoy! Four dollars a year from Speleonics, POB 5283, Bloomington, IN 47402-5283.

If your phone number is not shown in the "active" listing, it's because I don't have it. If you want it listed, drop me a note.

LOWFER HF nets continue here on the West Coast. Thursday nites about 9pm local on 1987-ish kHz. Sunday mornings about 8am on 3927 kHz approximately. The nets are VERY informal, so don't be afraid to just jump in with your call. We'd be happy to have you!

CU next issue! 73.

Jim ☺